epoq by TEMPTECH

QUICK START GUIDE

Ref. EWDU40B25G

Important Safety Instructions
For your safety and correct use of the device, carefully read the instructions and warnings before installing and using the wine cabinet for the first time. Visit our websites to download the complete instructions manual and see compatible accessories.

1. Installation and Getting Started

- **Choose the Right Location:** Place the wine cellar in a well-ventilated room away from direct sunlight or heat sources. Optimal performance occurs between 23°C and 25°C.
- **Surface Requirements:** Install on a flat, stable surface. Ensure adequate space for door opening (some models require a door opening of more than 90°).
- **Wait Before Use:** Allow the appliance to sit for 24 hours before starting, to ensure the refrigerant circuit is fully efficient.
- **Power Connection:** Plug the power cord into a wall outlet.

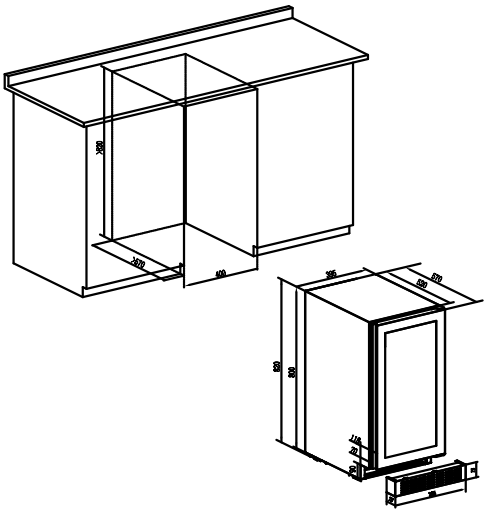

- **Net Product Dimensions:**
  WxHxD: 395 x 820 x 570mm
- **Net Niche Dimensions:**
  WxHxD: 400 x 820 x 570 mm

2. Capacity and Storage

- **Shelving:** Supplied with 6 beech shelves, the wine cellar can store up to 29 Bordeaux 75cl bottles.
- **Capacity Guidelines:** The stated capacity is based on EN62552 standards. Different bottle types or adding extra shelves may reduce the storage capacity.
- **Customization:** Some models allow for personalized interior configurations. View compatible accessories on our websites

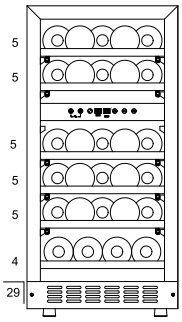

3. Temperature Settings

Temperature Adjustment: Set the temperature between 5°C and 20°C based on the type of wine. Avoid frequently opening the door to maintain stable conditions.

Control Panel Instructions:

- There is auto lock on the control panel, please unlock before operating the light or temperature.

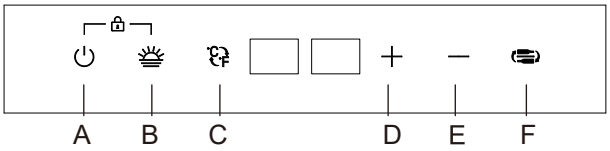

- **(A) Power On/Off:** Press and hold for 4 seconds.
- **(B) Light On/Off:** Press to turn the light on or off.
- **(A+B) Unlock Control Panel:** Locks after 15 seconds without operation. Press for 3 seconds to unlock.
- **(C) Change Temperature Unit:** Press to switch between Celcius and Farenheit.
- **(D/E) Temperature Adjustment:** Use the up or down keys to increase or decrease temperature by 1°C.
- **(F) Zone Control:** Press to adjust the temperature for either the upper or lower zone.
- **(B+F) Demo Mode:** Press and hold for 5 second to enter/exit.

4. Maintenance and Cleaning

- **Regular Cleaning:** Unplug the appliance before cleaning. Use warm water with mild detergent, then rinse with clean water. Allow to dry completely before reconnecting.
- **Filter Replacement:** Replace the charcoal filter annually if your cellar has one.
- **LED Lighting:** The interior LED lighting is designed for long-term use and cannot be changed by the consumer. For replacement, contact after-sales service.
- **Error Codes:** If an error code appears, contact after-sales service. Spare parts are available for up to 10 years as per EU Regulation 2019/2019

Access to Manual & Documents

For more detailed instructions, download the complete product manual and other documents at our websites.

www.temptech.no/en/product-information/

epoq by TEMPTECH

QUICK START GUIDE

Ref. EWDU40B25G

Important installation instructions
This appliance is intended for installation in niches under the counter. Optionally it can be placed and operated as a freestanding wine cabinet without installation

The removable ventilation grille included is only to be installed when the appliance is placed as a freestanding unit, and is not to be used when installing the wine cabinet into a niche.

Installation in a niche

The ventilation passage in the front base of the wine cabinet must not be covered or obstructed in any way.

If the appliance is placed behind the kitchens plinth, it's required to install a separate ventilation grille* in the kitchens base to allow sufficient air-flow.

Ventilation grills for kitchen installation is sold separately*
Ref. VENT300B, VENT300W, VENT600B, VENT600W

Freestanding placement

The ventilation passage in the front base of the wine cabinet must not be covered or obstructed in any way.

In cases where the appliance is used as a freestanding unit, and not installed into niches it's recommended to install the included ventilation grille in the base of the appliance.

Follow instructions below for installation of the removable ventilation grille.

Installation guide for Removable Front Grille

1. Locate the plinth

- Find the plinth, which is packaged inside the appliance

2. Remove the Adjustable section:

- Remove the four screws (two on each side) from the plinth section. Be sure to support both sections to prevent the adjustable section from falling.
- Place the adjustable front section in a safe location.

3. Secure the Appliance

- With the help of another individual, make sure the wine cabinet is secure and tilt it backwards to gain full access to the area below the door. Make sure that the door is kept closed at all times during this process in order to avoid damage to the door and appliance.

4. Remove screws (if present)

- If there are screws marked as 'A' (shown in Fig. 1), remove these
- Locate the four black fitting screws, which are packaged inside the appliance with the door reversing hinge.

5. Remove additional screws (if present)

- If there are screws marked as 'B' (shown in Fig. 2), remove these as they are not needed.

6. Attach the plinth

- Position the plinth as shown in Fig. 3.
- Using a magnetic-tipped screwdriver, insert two black fitting screws through the oval access holes (shown in Fig. 3) and tighten them.

7. Secure the plinth

- Install a black fitting screw into each of the two lower holes (shown in Fig. 3) to secure the plinth to the underside of the wine cabinet.

8. Adjust the height

- Adjust the feet of the wine cabinet to achieve the desired height.
- If needed, reattach the extendable plinth section with the four screws removed in Step 2. If the extendable section obstructs the floor, remove it.

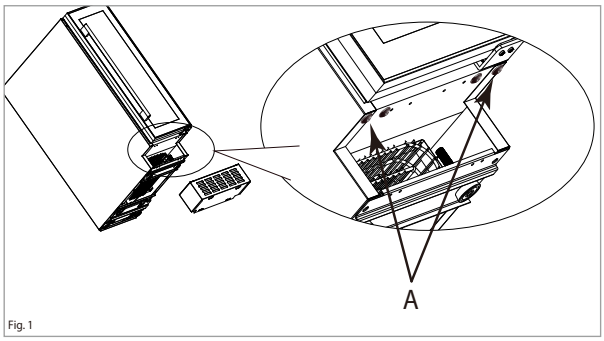

Fig. 1

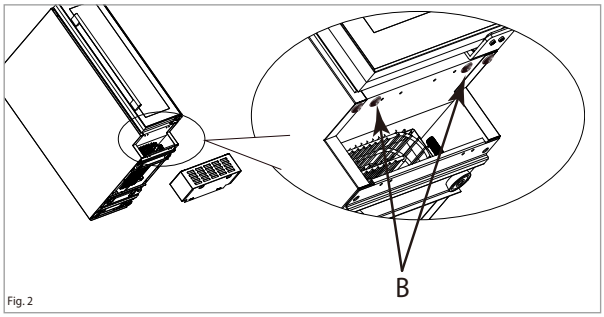

Fig. 2

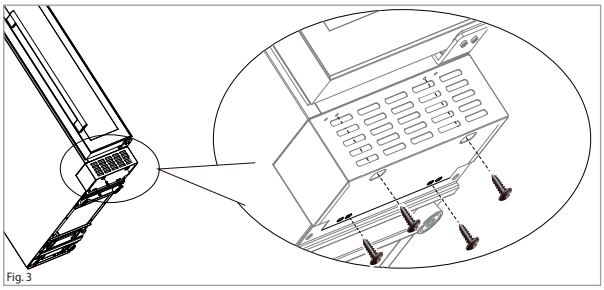
Fig. 3