DUNAVOX

THE WINE COOLING EXPERT

Wine Cooler

B F

DUNAVOX SERA - 58

DX-58.258DB

DUNAVOX SERA - 70

DX-70.258B

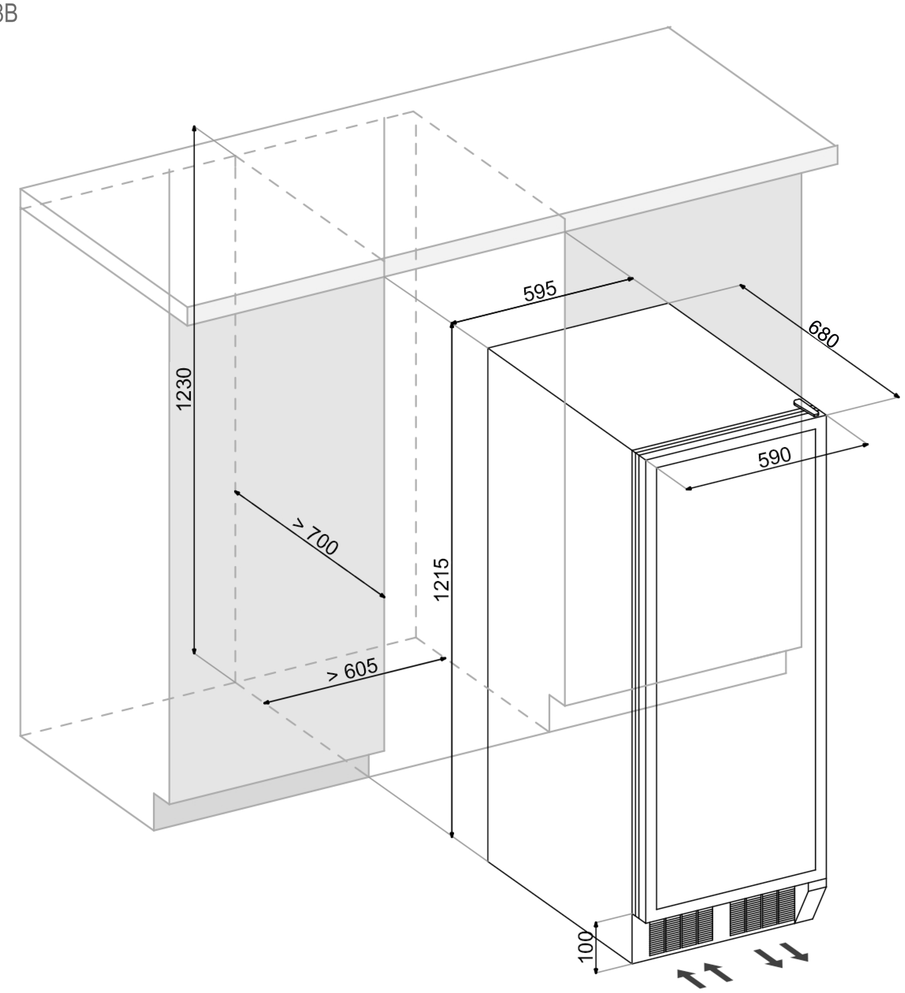

Front View

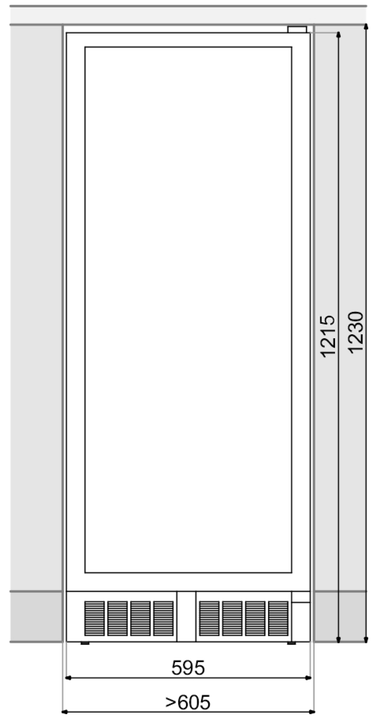

Side View

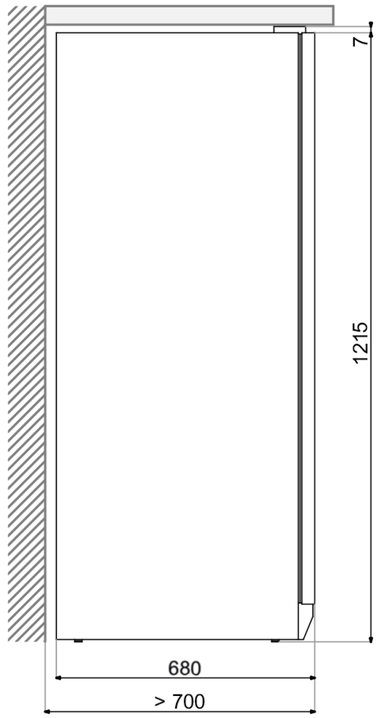

Top View

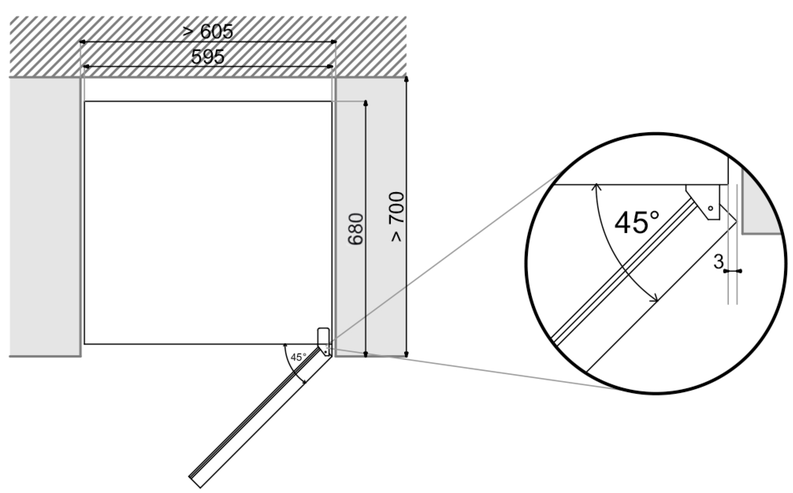

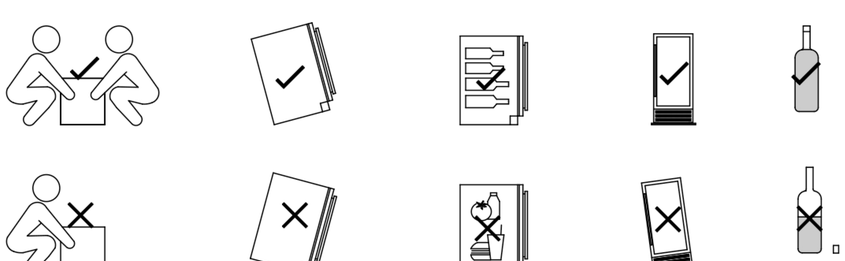

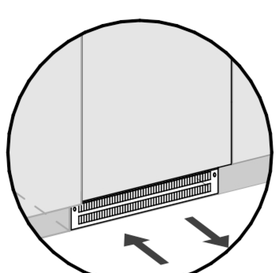

2026.V.1 Copyright Dunavox Kft. All rights reserved www.dunavox.com